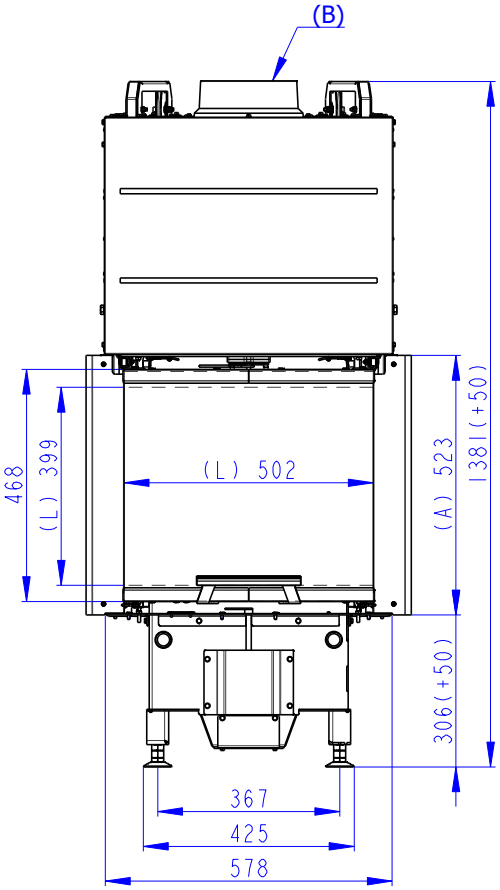

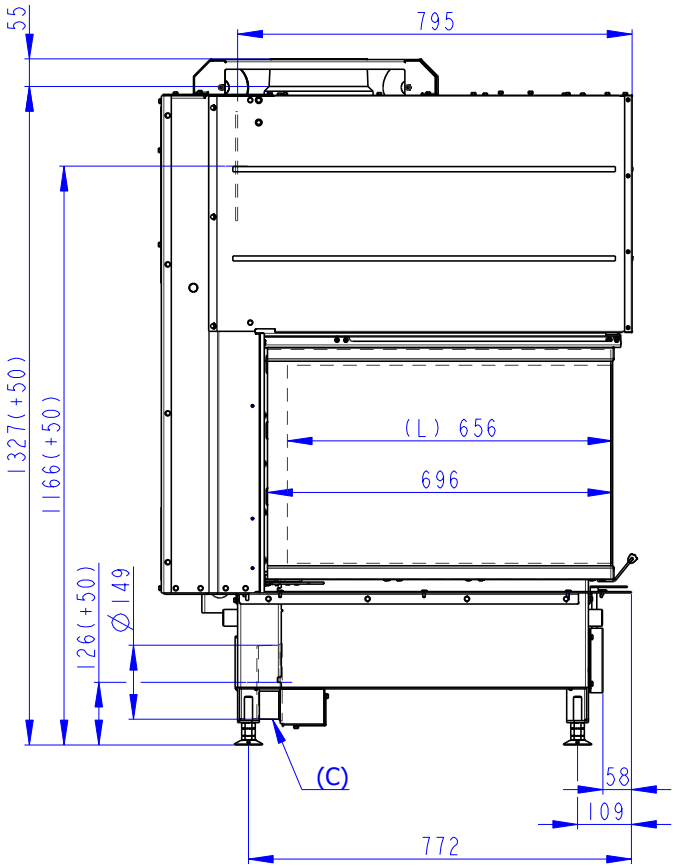

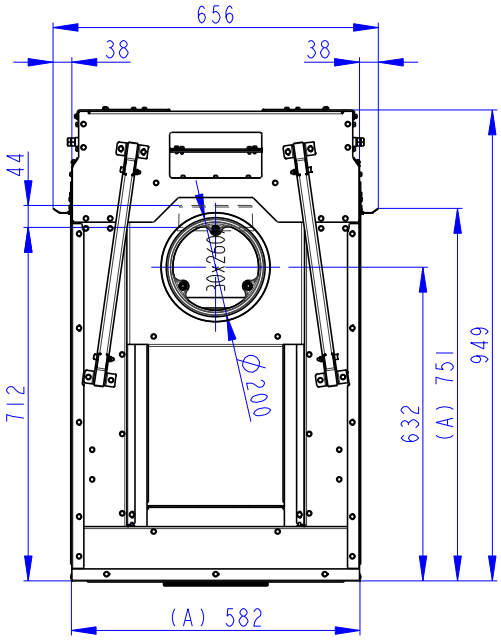

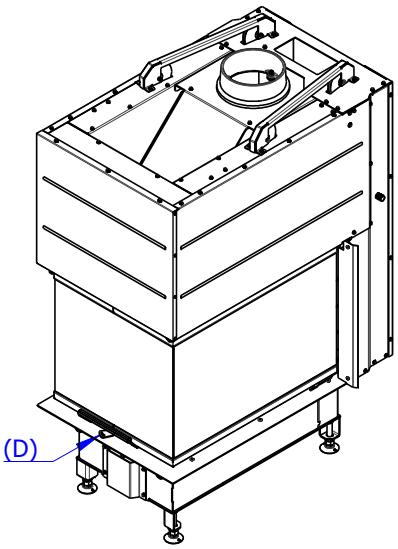

(A) Zastavbovy rozmer / In-built dimension / Baumaße
(B) Litinový odvod koure / Cast iron spigot / Der gusseiserne Rauchabgang
(C) Centralni privod vzduchu / Central air inlet / Zentralluftzufuhr
(D) Primarni a sekundarni vzduch / Primary and secondary air / Primärluft und Sekundärluft
(L) Volna plocha proskleni / Free glass area / Freie Glassichtfläche

Romotop®

Heat U 3g 50.52.70.21 (24) + H2 AIRBOX 02

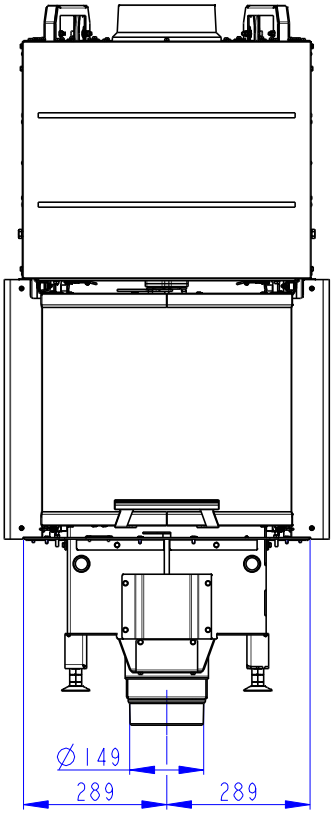

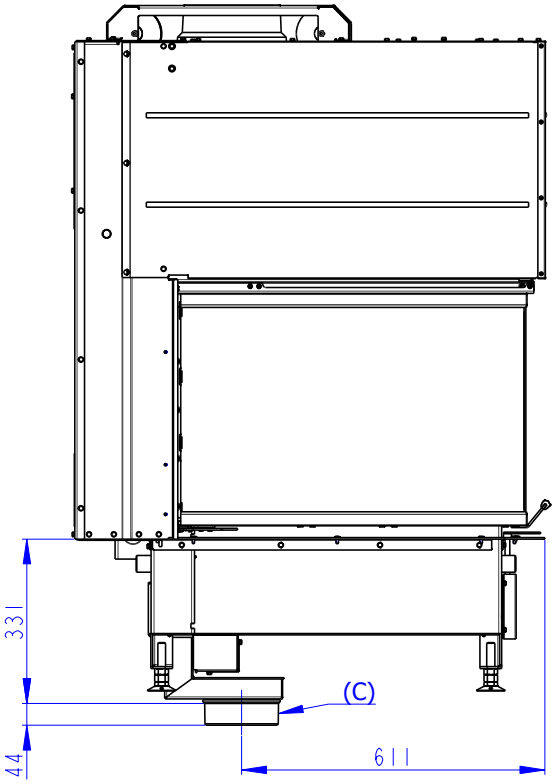

Romotop®

Heat U 3g 50.52.70.21 (24) + HU3LF KON01

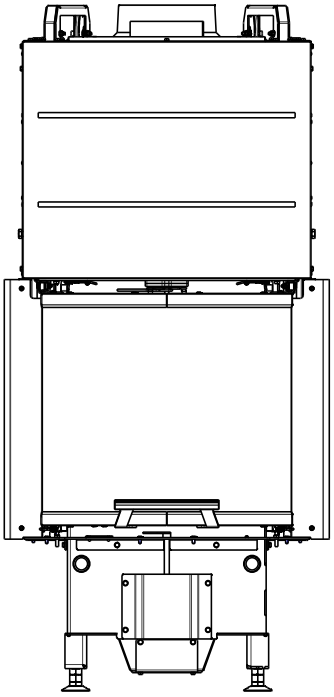

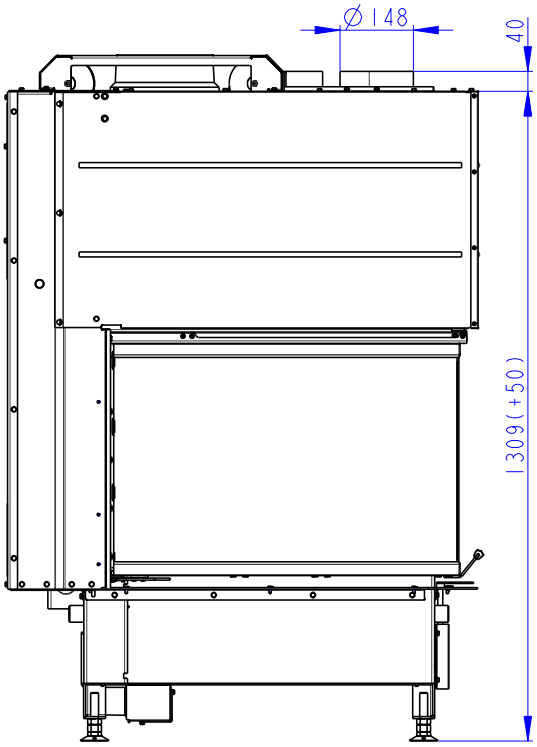

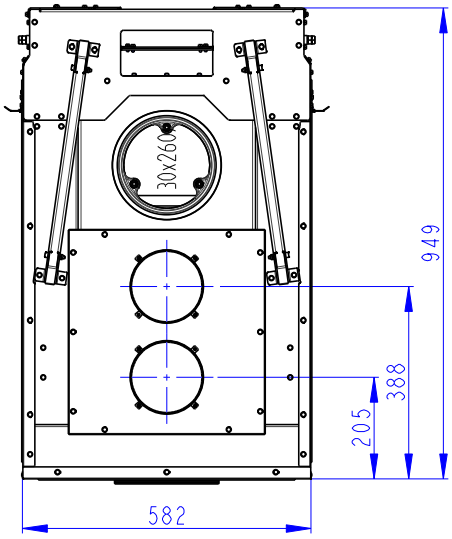

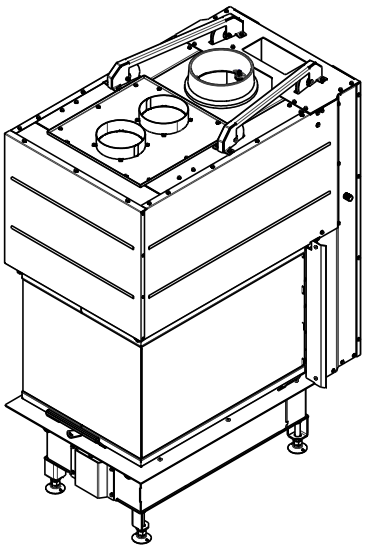

Romotop®

Heat U 3g 50.52.70.21 (24) + HU3LF RAM11

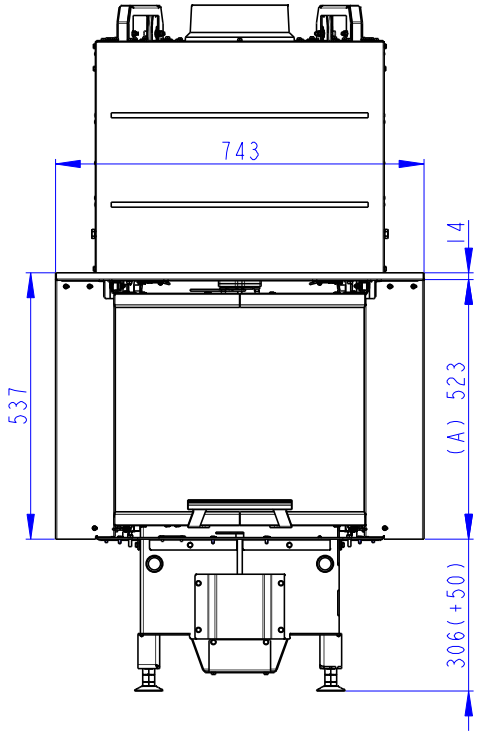

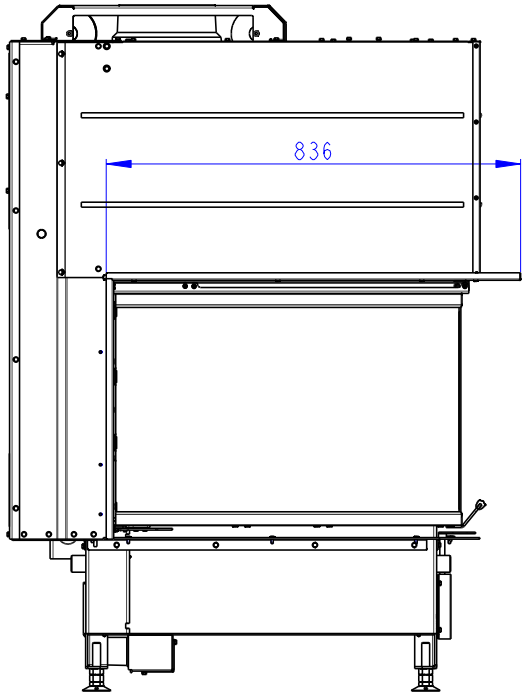

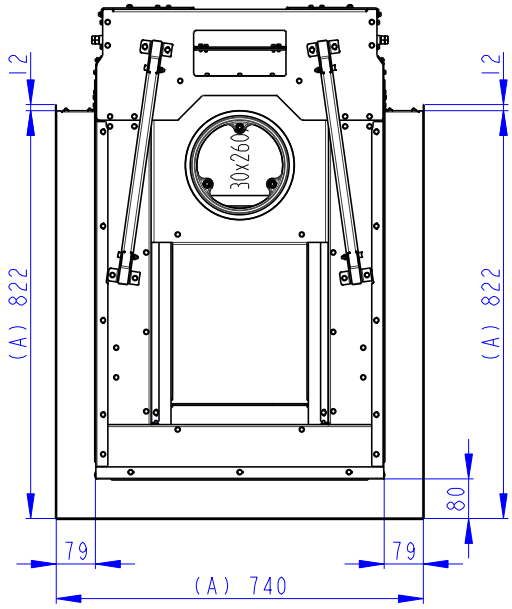

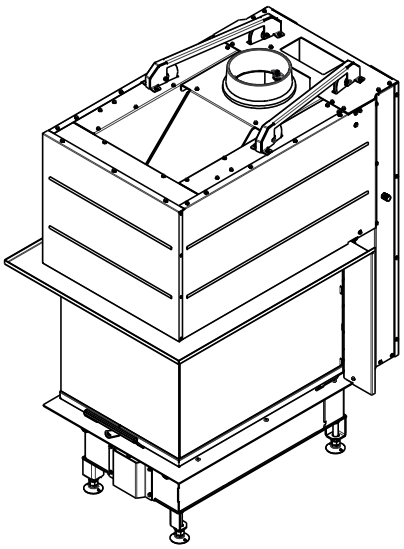

Romotop®

Heat U 3g 50.52.70.21 (24) + HU3LF RAM12

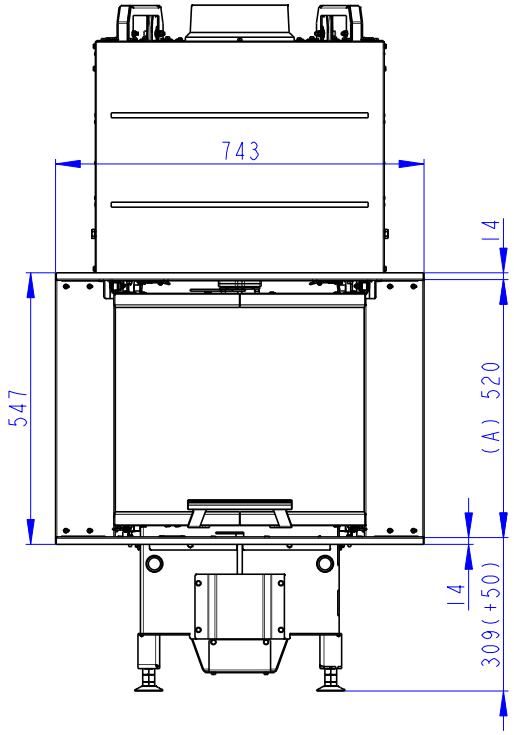

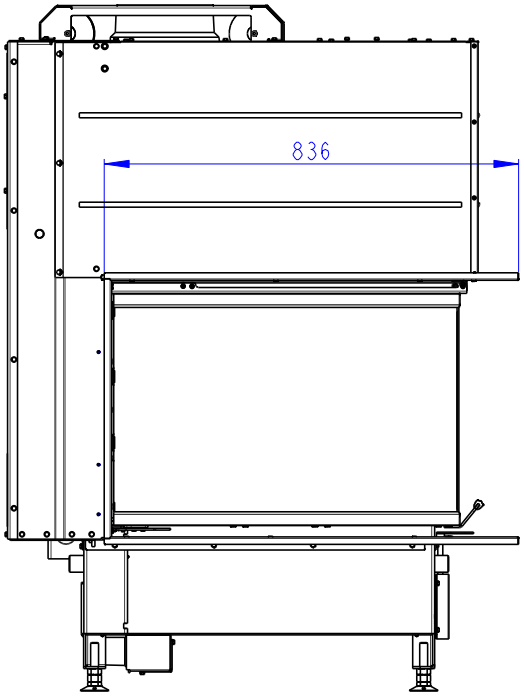

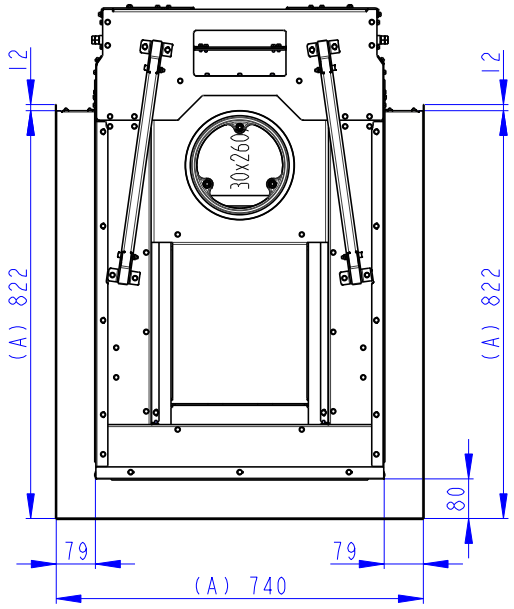

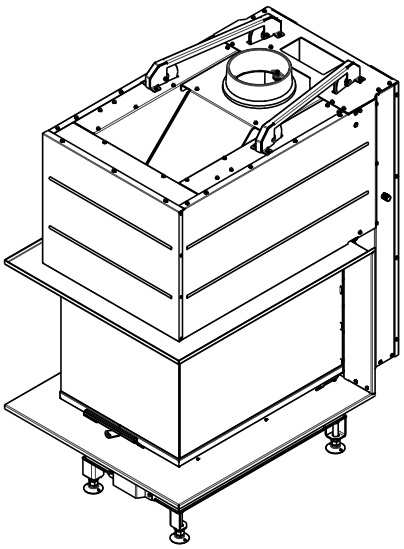

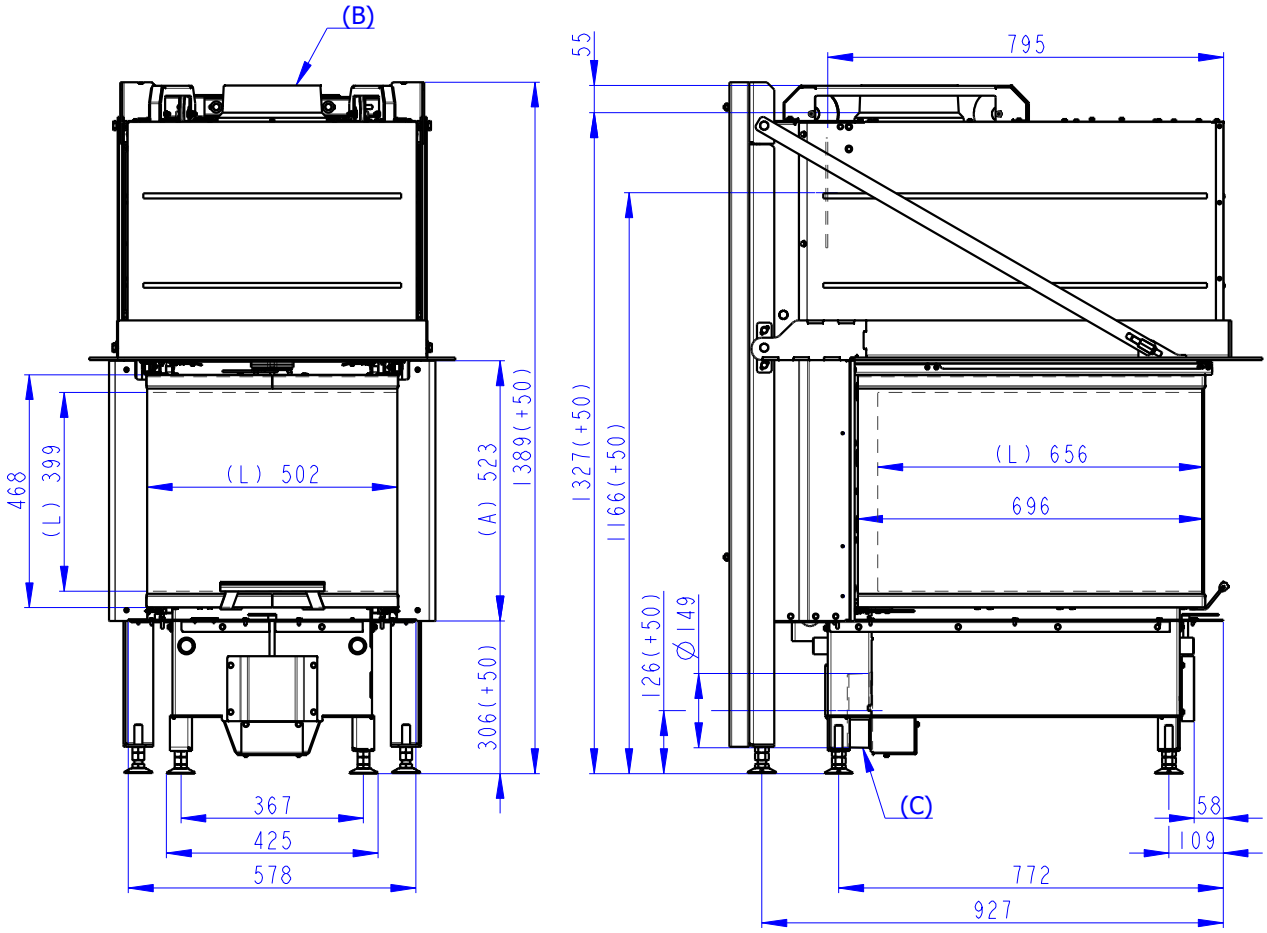

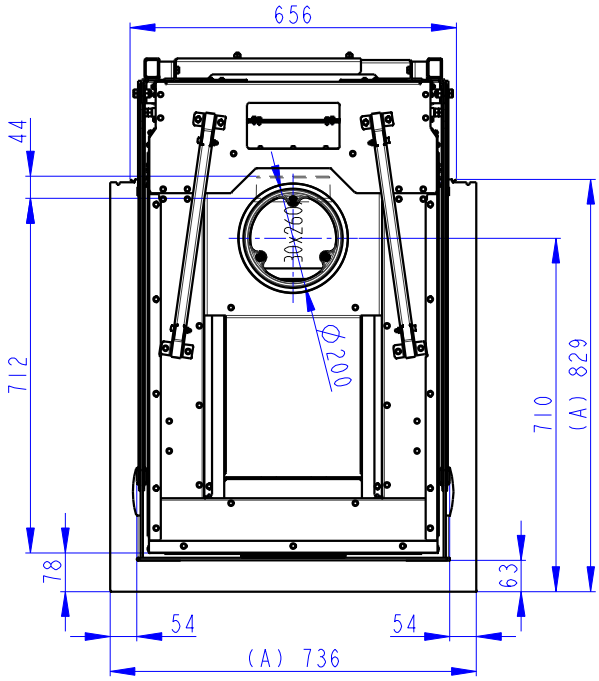

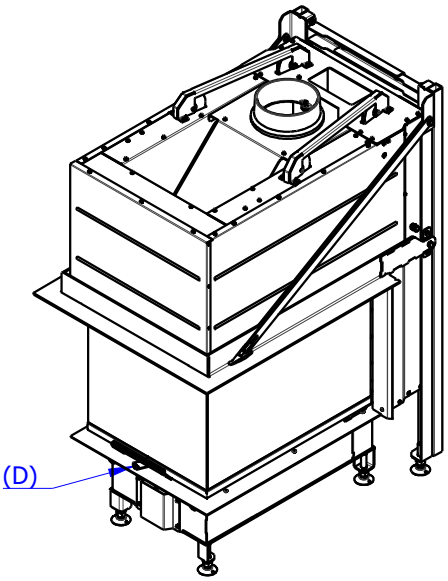

(A) Zastavbovy rozmer / In-built dimension / Baumaße
(B) Litinový odvod koure / Cast iron spigot / Der gusseiserne Rauchabgang
(C) Centralni privod vzduchu / Central air inlet / Zentralluftzufuhr
(D) Primarni a sekundarni vzduch / Primary and secondary air / Primärluft und Sekundärluft
(L) Volna plocha proskleni / Free glass area / Freie Glassichtfläche

Romotop®

Heat U 3g 50.52.70.21 (24) K1 + H2 AIRBOX 02

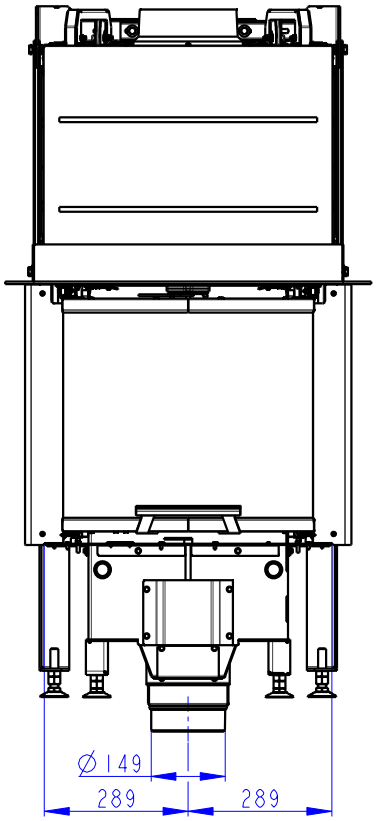

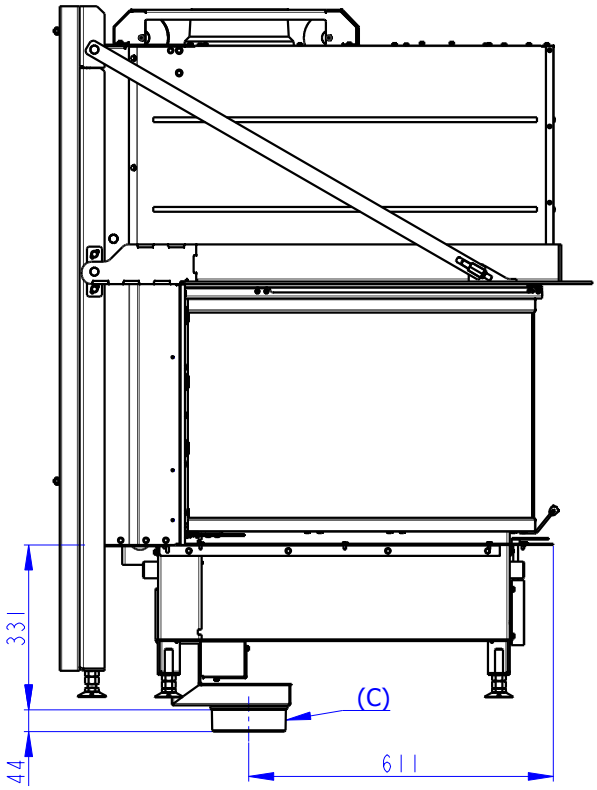

Romotop®

Heat U 3g 50.52.70.21 (24) K1 + HU3LF KON01

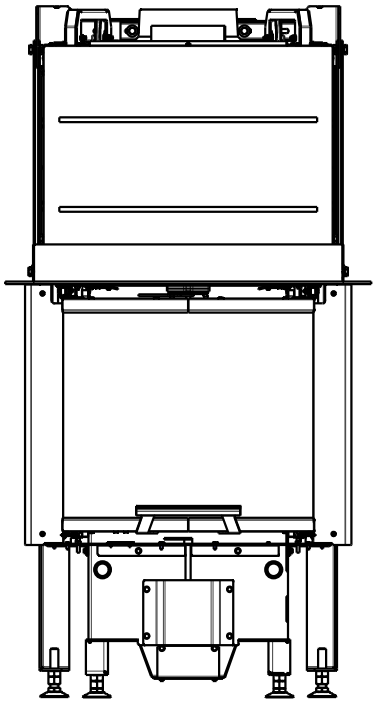

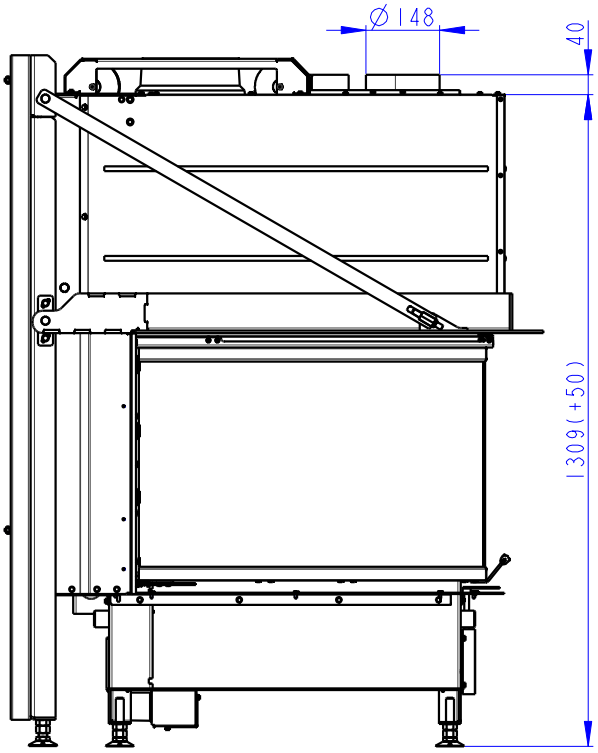

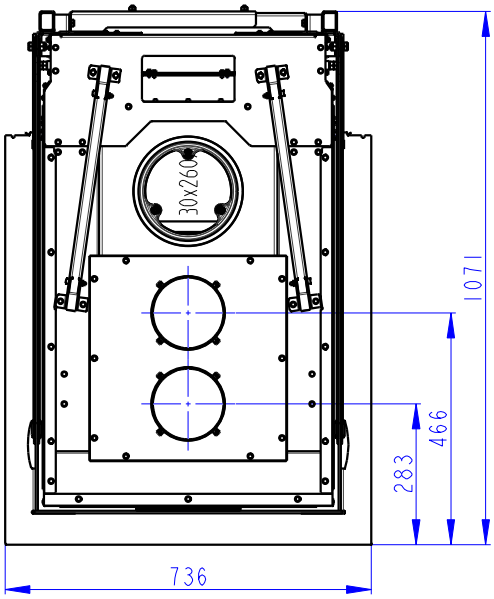

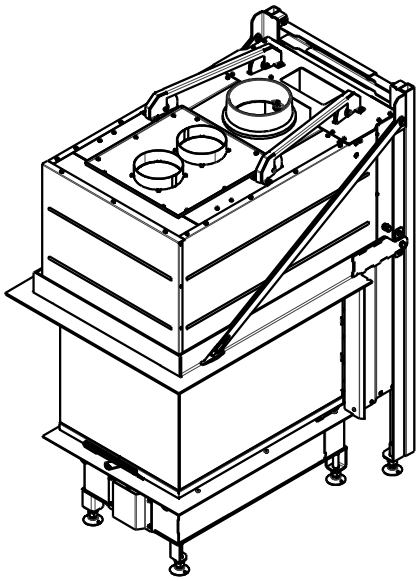

Romotop®

Heat U 3g 50.52.70.21 (24) K1 + HU3LF RAM11

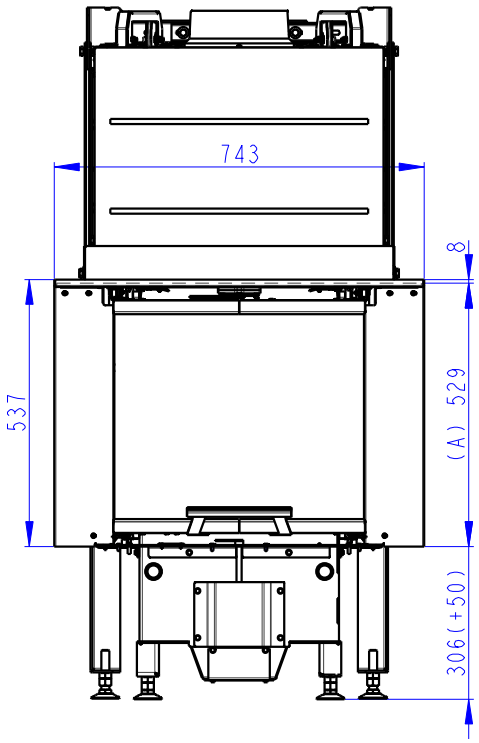

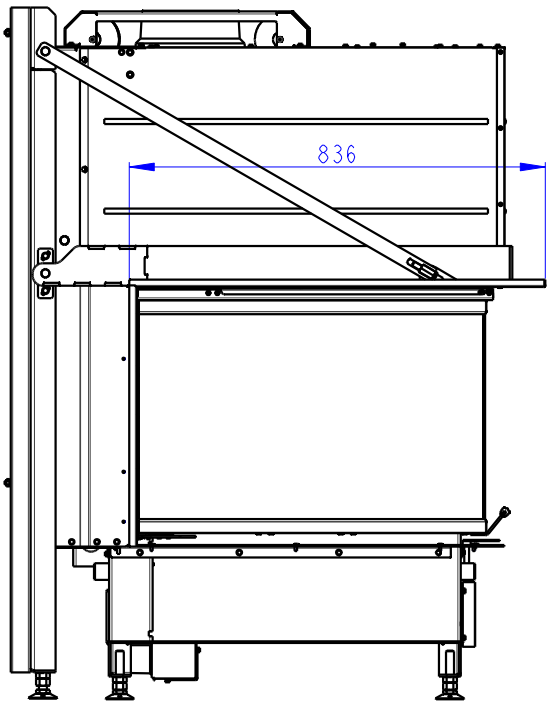

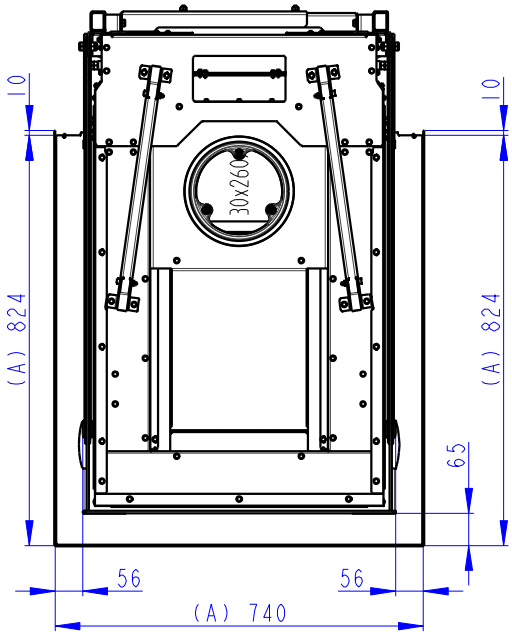

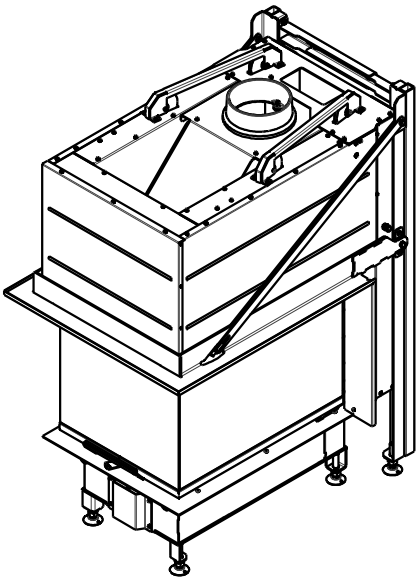

Romotop®

Heat U 3g 50.52.70.21 (24) K1 + HU3LF RAM12

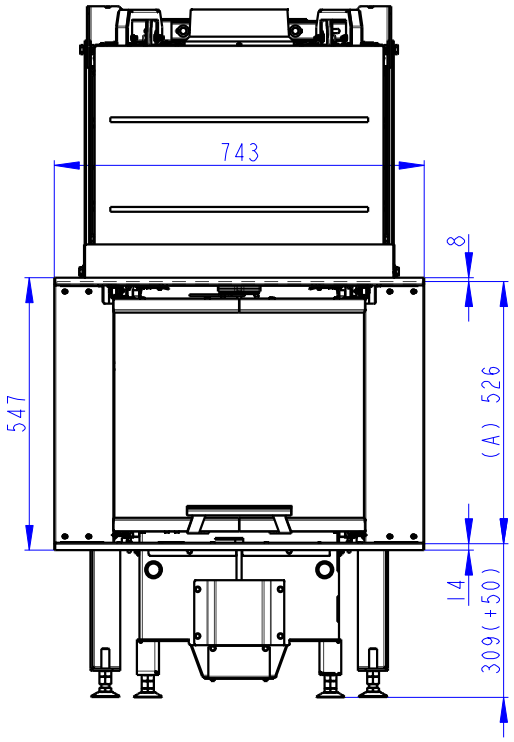

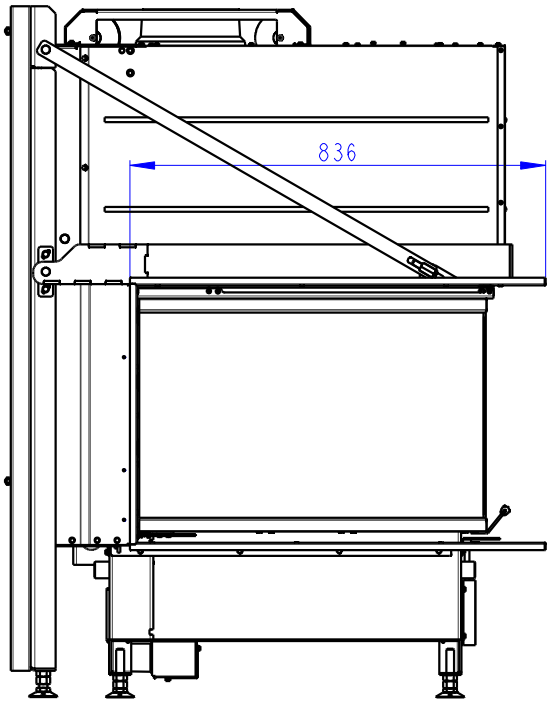

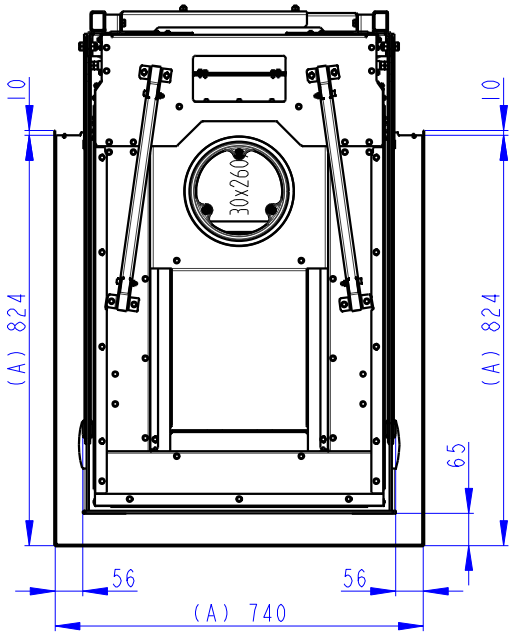

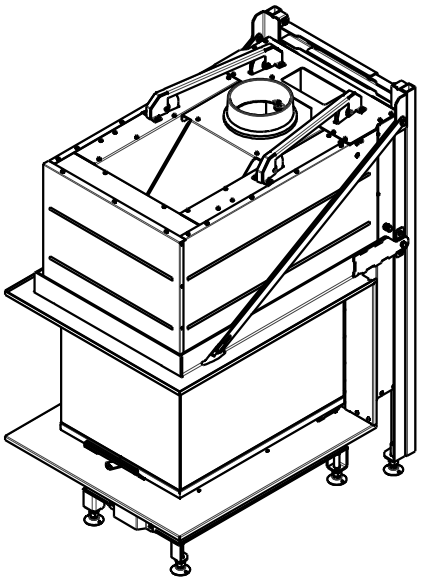

Romotop®

Heat U 3g 50.52.70.21 (24) K1 + HU3LF RAM13

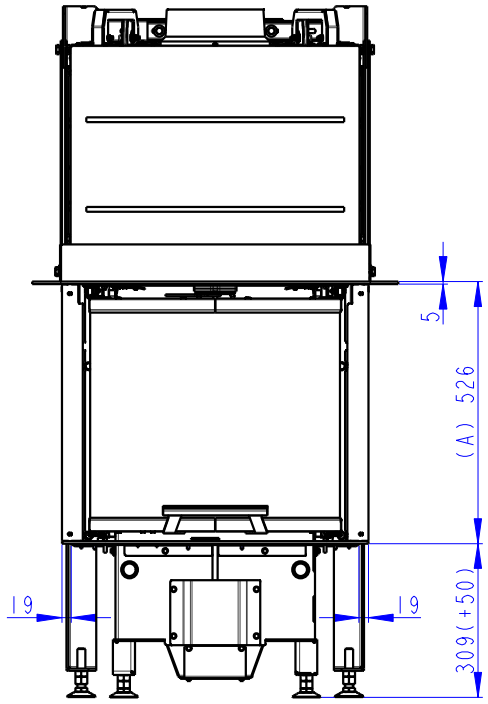

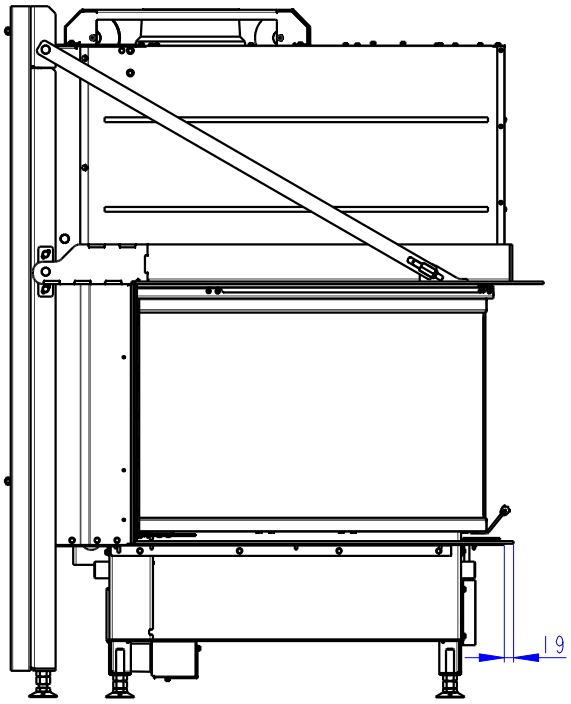

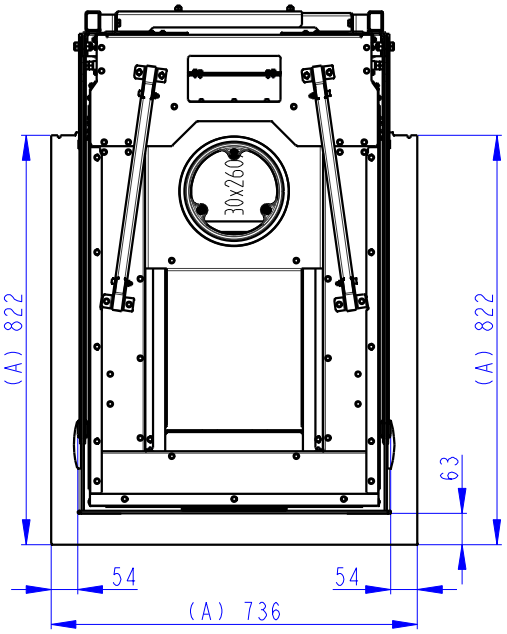

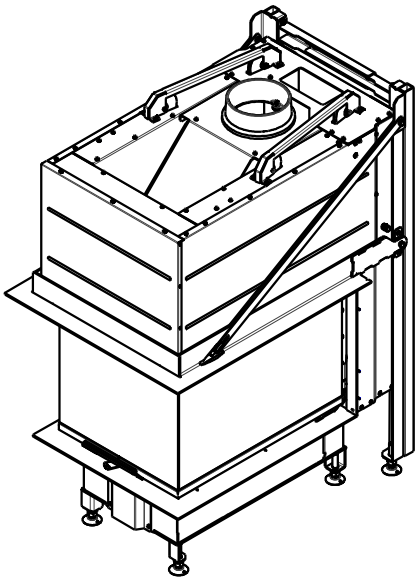

Romotop®
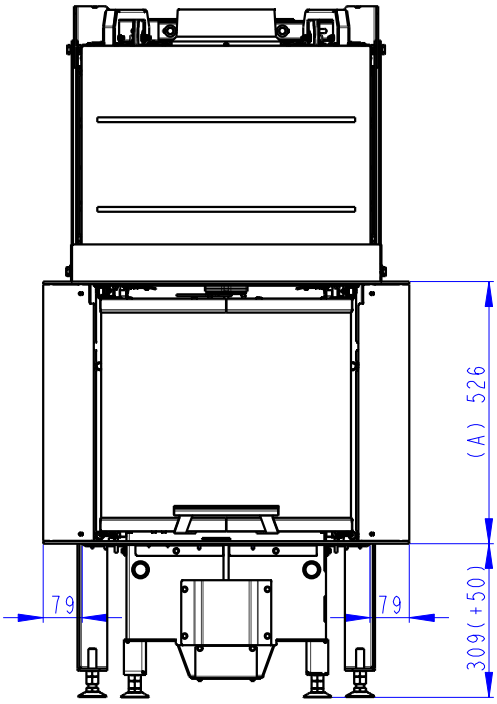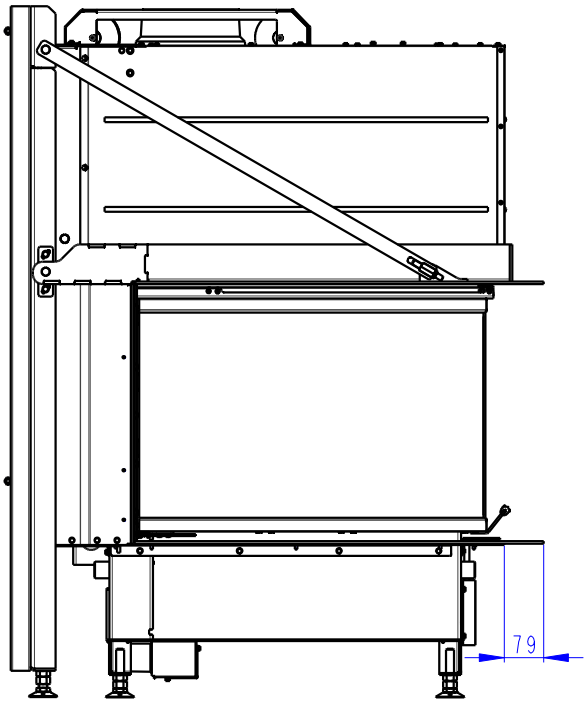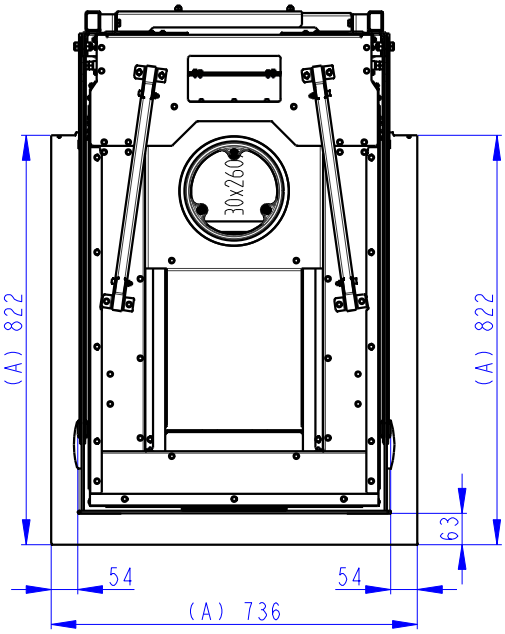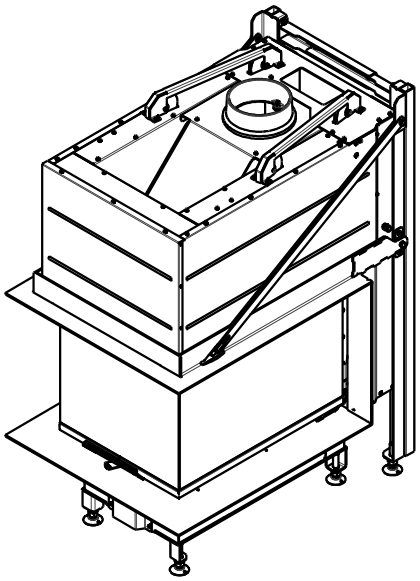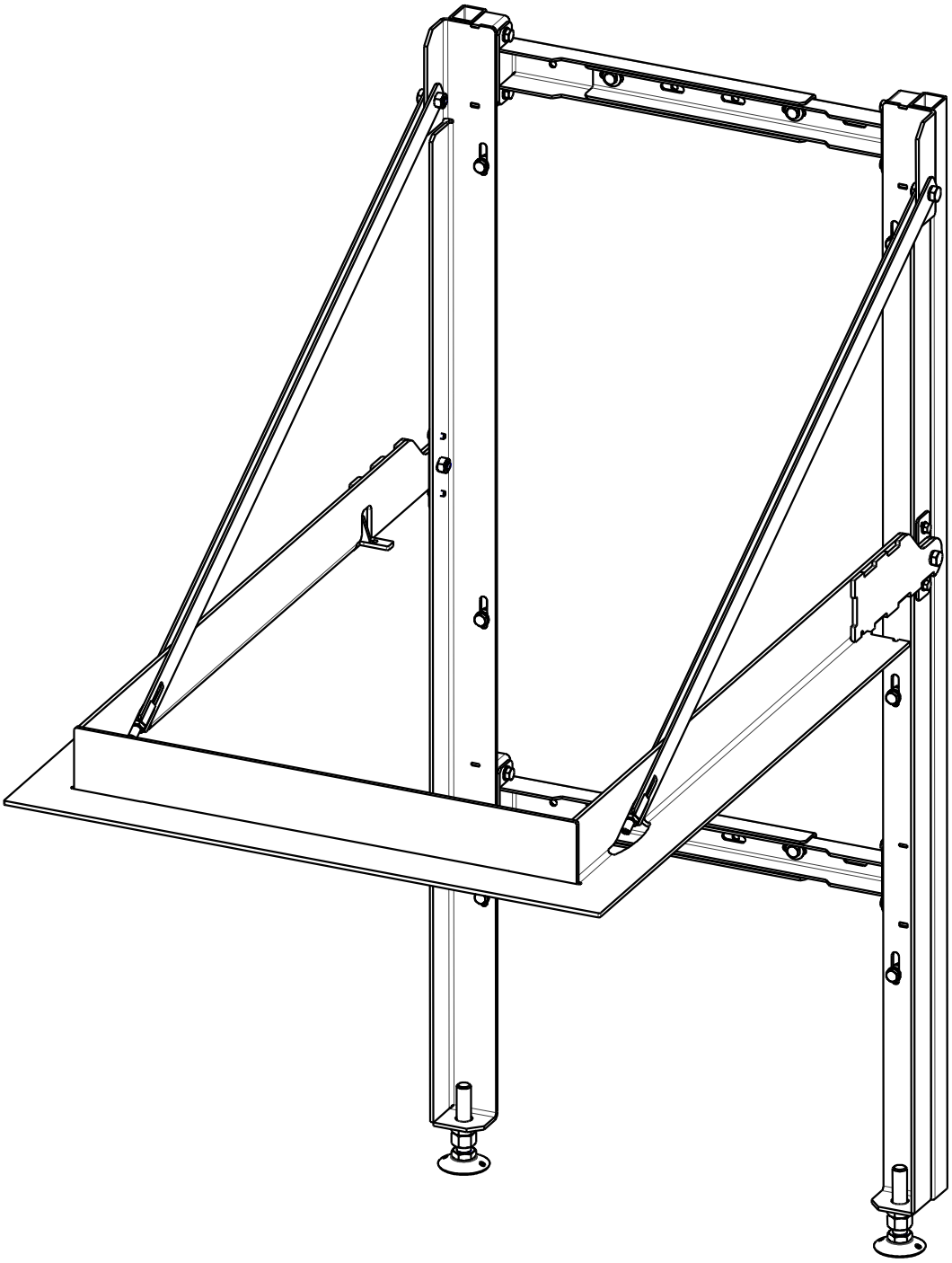
HHeat U 3g 50.52.70.21 (24) K1 + HU3LF RAM14