RIANO 01
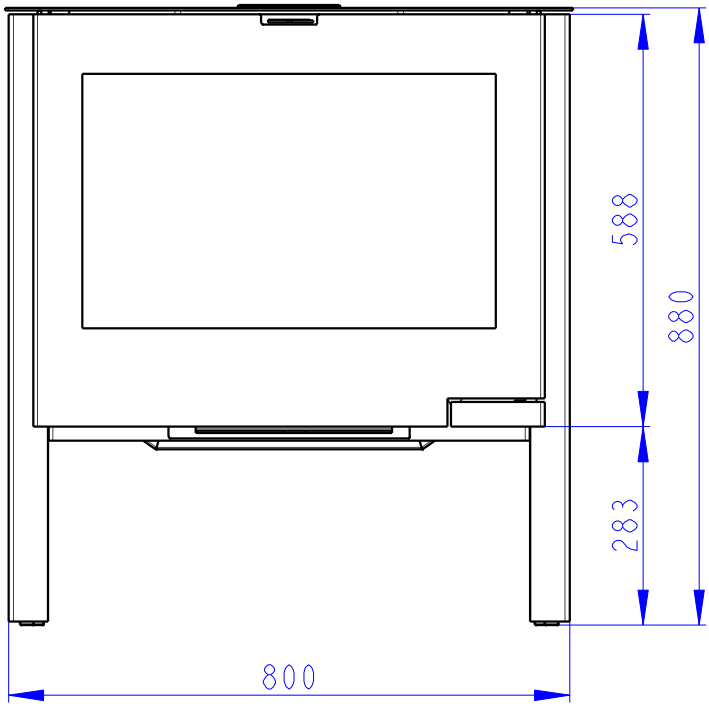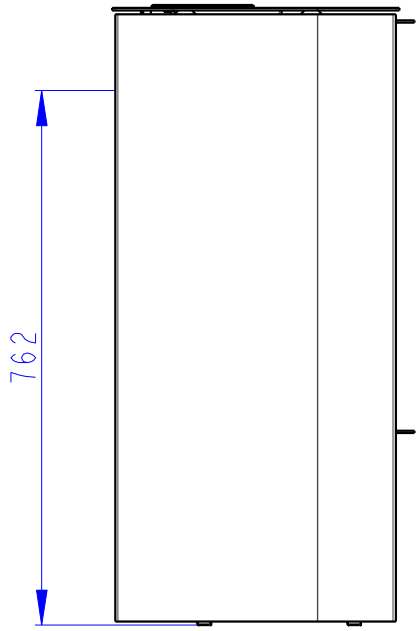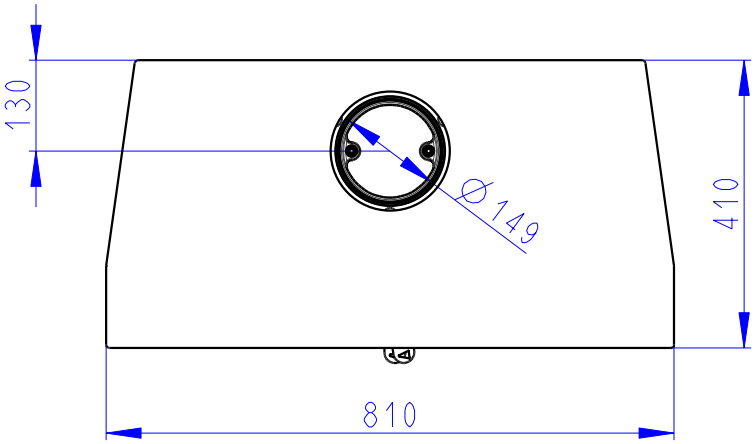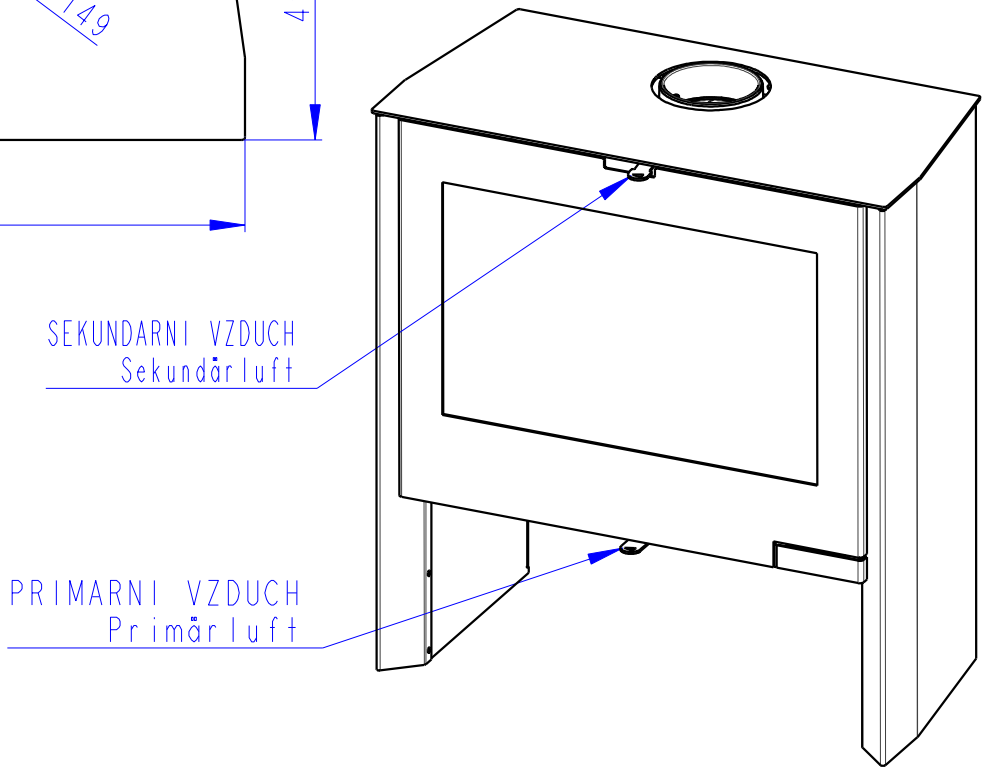
PLECH
STAHL KOMPLETT
FULL STEEL